13”x 70’ & 90’ XL
MECHANICAL DRIVE
SWING AWAY AUGER

PARTS LISTS
SERIAL NOS. 84000 - 87999

70’ TUBE AND UNDERCARRIAGE ASSEMBLY - 13” MDSA AUGER
SERIAL NOS. 84000 - 87999

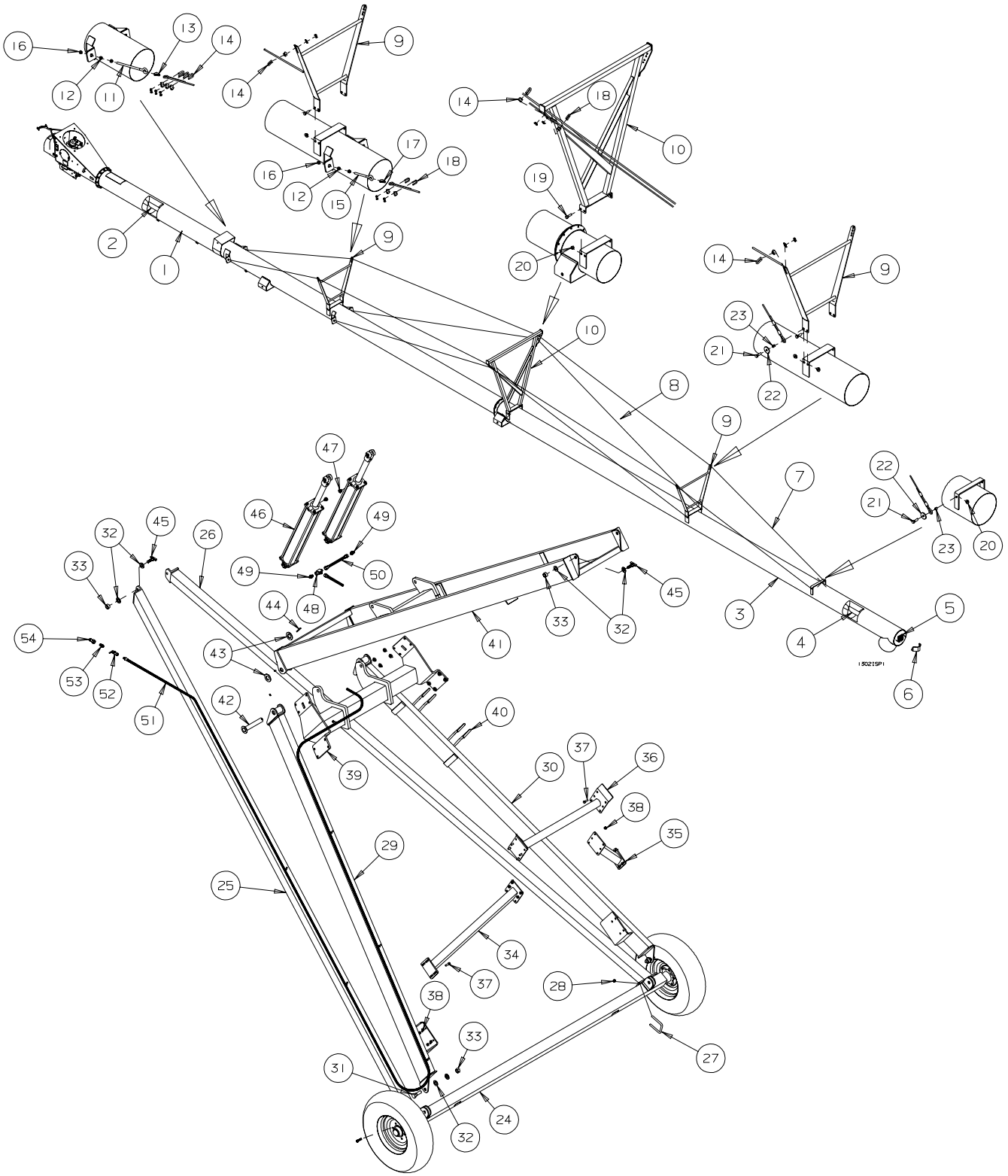

REF #	PART NO.	DESCRIPTION
1	C306856	Lower Tube Weldment
2	C306611	Lower Flight Weldment
3	C302855	Upper Tube Weldment - 70’
4	C303601	Upper Flight Weldment - 70’
5	B017160	1 3/8” Bearing - 4 Bolt
6	B399756	Head End Safety Cover
7	B008310	1/2” dia x 53’ Truss Cable
8	B008308	3/8” dia x 32.5’ Truss Cable
9	C302871	Small Truss Tower
10	C305872	Large Truss Tower
11	B0020247	5/8”x 16” Eyebolt
12	C302919	Eyebolt Bushing
13	B008086	1/2” Cable Thimble
14	B008085	1/2” Cable Clamp
15	B0020246	5/8”x 9 3/8” Eyebolt
16	B001139	5/8” Hex Nut
17	B008081	3/8” Cable Thimble
18	B008080	3/8” Cable Clamp
19	B001086	5/8”x 1 1/4” Bolt
20	B0011415	5/8” Lock Nut
21	B001071	5/8”x 2 1/2” Bolt
22	B0020717	2.5” ODx 5/8” ID Washer
23	B002311	Buttite Spacer - 5/8” ID x 3/4” lg.
24	C302864	Axle Weldment - 70’
25	C302865R	Axle Arm - 70’ - Right
26	C302865L	Axle Arm - 70’ - Left
27	B0020188	5/8”x 4” U-bolt x 5 1/2” lg.
28	B0011415	5/8” Lock Nut
29	C302866R	Lift Arm - 70’ - Right
30	C302866L	Lift Arm - 70’ - Left
31	B0011177	1”x 3” Bolt
32	B001159	1” Flatwasher
33	B001075	1” Lock Nut
34	C200727	Transport Uprite - 70’ - Right
35	C200730	Transport Uprite - 70’ - Left
36	C302918	Transport Rest Cross - 70’
37	B001040	1/2”x 1 1/4” Bolt
38	B001136	1/2” Lock Nut
39	C302863	Lift Cross - 70’
40	B0020213	5/8”x 8” U-bolt x 4 1/2” lg.
41	C302867	Ladder - 70’
42	C302931	1 1/2” dia. Hinge Pin
43	B001161	1 1/2” Flatwasher
44	B0020605	5/16”x 3” Roll Pin
45	C200666	1”x 2 1/2” Suspension Bolt
46	B0191677	4”x 36” Hydraulic Cylinder
47	B0193051	#6 MORB Breather, 10 micron
48	B019463	Tee - #6 FJIC x #6 MJIC x #6 MJIC
49	B019416	#6 MORB x #6 MJIC - 1/16” dia Restrictor
50	B019249	3/8” Hydraulic Hose x 18” - #6 FJIC both ends
51	B019292	3/8” Hydraulic Hose x 56’ - 3/8” MPT x #6 FJIC
52	B019300	3/8” FPT Hydraulic Ball Valve
53	B019516	1/2” MPT x 3/8” MPT Reducer Nipple
54	B019200	Pioneer Male Tip - 1/2” MPT

90’ TUBE AND UNDERCARRIAGE ASSEMBLY - 13” MDSA AUGER
SERIAL NOS. 84000 - 87999

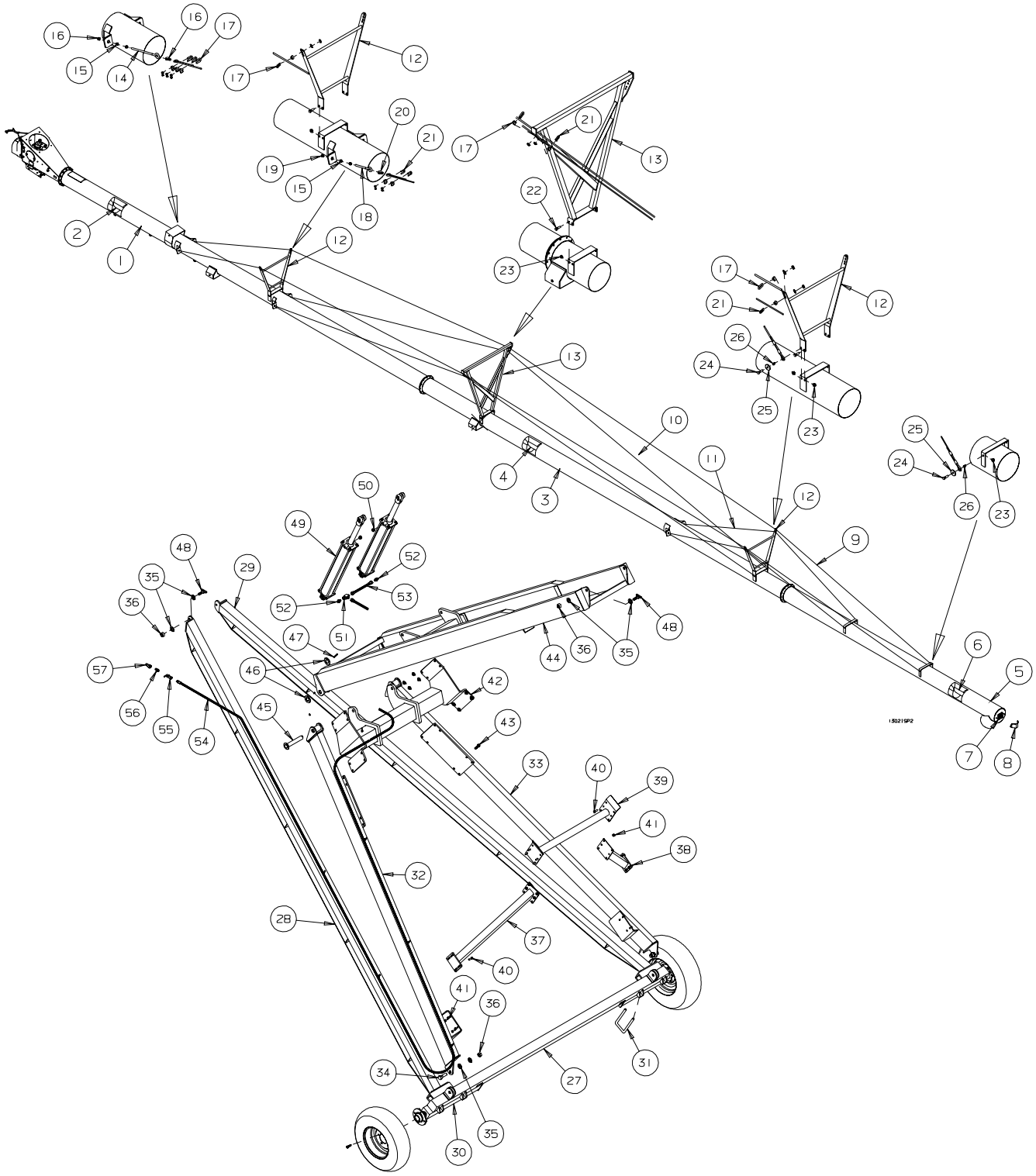

REF #	PART NO.	DESCRIPTION
1	C306856	Lower Tube Weldment
2	C306611	Lower Flight Weldment
3	C302857	Centre Tube Weldment
4	C303612	Centre Flight Weldment
5	C302858	Upper Tube Weldment - 90’
6	C303603	Upper Flight Weldment - 90’
7	B017160	1 3/8” Bearing - 4 Bolt
8	B399756	Head End Safety Cover
9	B008309	1/2” dia x 73’ Truss Cable
10	B008311	3/8” dia x 47’ Truss Cable
11	B008312	3/8” dia x 19.5’ Truss Cable
12	C302871	Small Truss Tower
13	C305872	Large Truss Tower
14	B0020247	5/8”x 16” Eyebolt
15	C302919	Eyebolt Bushing
16	B008086	1/2” Cable Thimble
17	B008085	1/2” Cable Clamp
18	B0020246	5/8”x 9 3/8” Eyebolt
19	B001139	5/8” Hex Nut
20	B008081	3/8” Cable Thimble
21	B008080	3/8” Cable Clamp
22	B001086	5/8”x 1 1/4” Bolt
23	B0011415	5/8” Lock Nut
24	B001071	5/8”x 2 1/2” Bolt
25	B0020717	2.5” ODx 5/8” ID Washer
26	B002311	Buttite Spacer - 5/8” ID x 3/4” lg.
27	C302876	Axle Weldment - 90’
28	C302869R	Axle Arm - 90’ - Right
29	C302869L	Axle Arm - 90’ - Left
30	C302877	Axle Extension - 90’
31	B0020211	5/8”x 5” U-bolt x 6 1/2” lg.
32	C302870R	Lift Arm - 90’ - Right
33	C302870L	Lift Arm - 90’ - Left
34	B0011177	1”x 3” Bolt
35	B001159	1” Flatwasher
36	B001075	1” Lock Nut
37	C302878R	Transport Uprite - 90’ - Right
38	C302878L	Transport Uprite - 90’ - Left
39	C302879	Tranport Rest Cross - 90’
40	B001040	1/2”x 1 1/4” Bolt
41	B001136	1/2” Lock Nut
42	C302880	Lift Cross - 90’
43	B001070	5/8”x 2” Bolt
44	C302868	Ladder - 90’
45	C302931	1 1/2” dia. Hinge Pin
46	B001161	1 1/2” Flatwasher
47	B0020605	5/16”x 3” Roll Pin
48	C200666	1”x 2 1/2” Suspension Bolt
49	B0191895	5”x 36” Hydraulic Cylinder
50	B0193051	#6 MORB Breather, 10 micron
51	B019463	Tee - #6 FJIC x #6 MJIC x #6 MJIC
52	B019441	#6 MORB x #6 MJIC Adapter Nipple
53	B019249	3/8” Hydraulic Hose x 18” - #6 FJIC both ends
54	B019293	3/8” Hydraulic Hose x 66’ - 3/8” MPT x #6 FJIC
55	B019300	3/8” FPT Hydraulic Ball Valve
56	B019516	1/2” MPT x 3/8” MPT Reducer Nipple
57	B019200	Pioneer Male Tip - 1/2” MPT

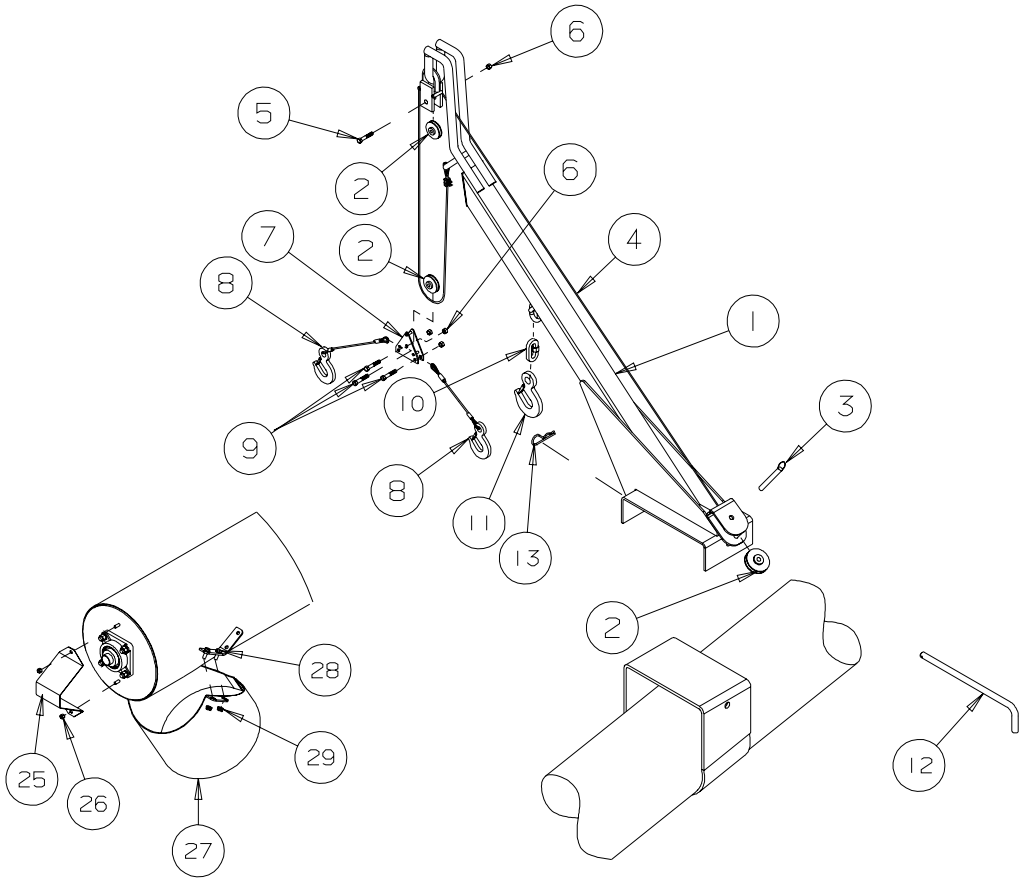

Upper Tube Head End Assembly

Lift Arm

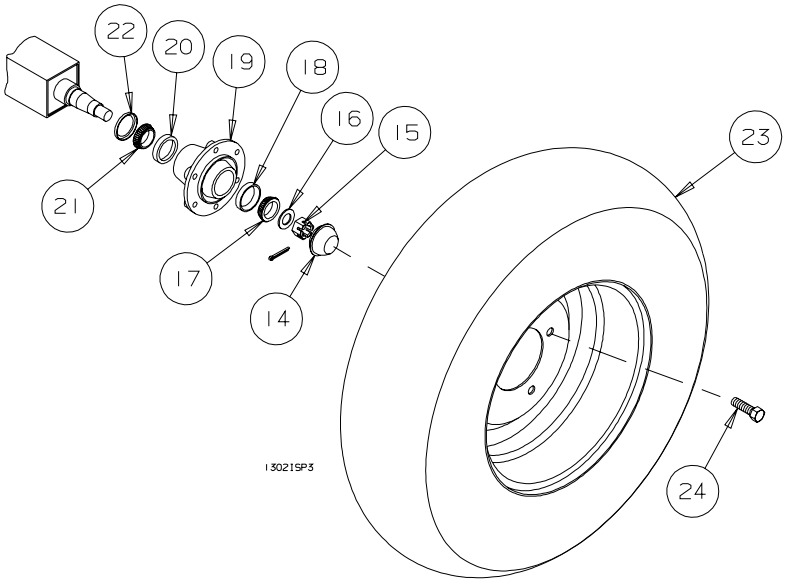

Wheel and Hub Assembly

REF #	PART NO.	DESCRIPTION
1	C304666	Hopper Lift Arm
2	B394712	3” OD Cable Sheave - 1/4” Cable
3	B002106	1/2”x 2” Quick Pin
4	B397710	1/4” cable x 53’
5	B001046	1/2”x 2 1/2” Bolt
6	B001136	1/2” Lock Nut
7	B397730	Triangle Pulley Bracket
8	B008307	1/4” Cable c/w Hook
9	B001044	1/2”x 2” Bolt
10	B021036	1/2” Rapid Chain Link
11	B002125	Steel Chain Hook - 3/4 Ton
12	B399757	Lift Arm Pin
13	B002091	3/16”x 3 3/4” Hair Pin Clip
14	B011503	Dust Cap - 6 Bolt Hub
15	B011681	1” Castle Nut
16	B001158	1” SAE Flatwasher
17	B011603	Outer Cone - 6 Bolt Hub - LM67048
18	B011602	Outer Cup - 6 Bolt Hub - LM67010
19	B011003	6 Bolt Hub c/w Bearings
20	B011652	Inner Cup - 6 Bolt Hub - LM29710
21	B011651	Inner Cone - 6 Bolt Hub - LM29749
22	B011650	Grease Seal - Bolt Hub - 17617
23	B011221	P255R70 - 16 Tire and Rim - 70’
23	B011219	ST235/85R16 Tire and Rim - 90’
NS	B011218	ST235/85R16 Tire only
24	B011504	Wheel Bolt
25	B399756	Bearing Cap
26	B0011276	5/16” Locking Flange Nut
27	C307090	13” Spout
28	B001433	3/8”x 1” Serrated Flange Bolt
29	B0011326	3/8” Locking Flange Nut

INTAKE BOOT ASSEMBLY - 13” MDSA AUGER
SERIAL NOS. 84000 - 87999

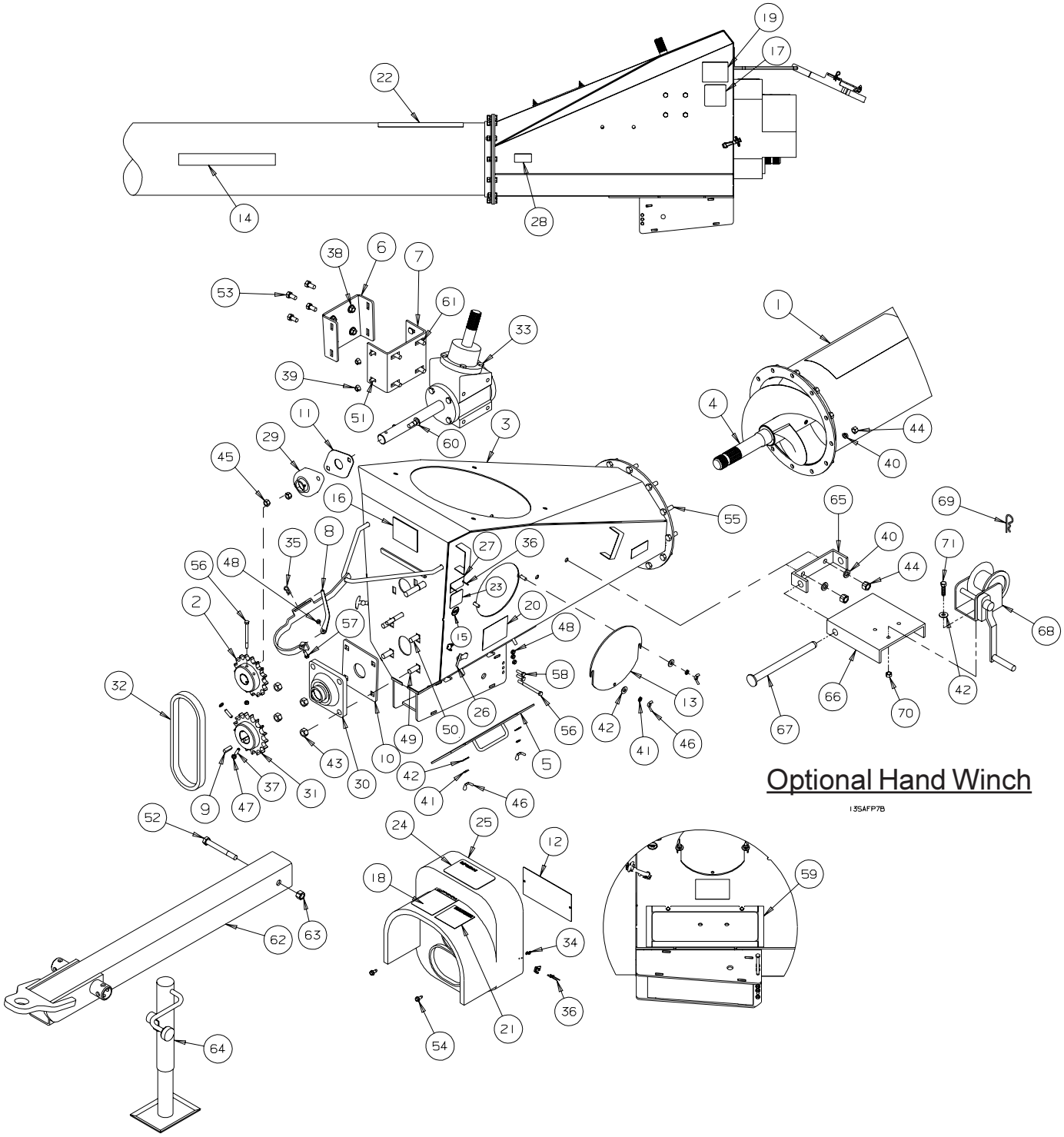

REF #	PART NO.	DESCRIPTION
1	C306856	Lower Tube - 70’ & 90’
2	C306773	80-17 Sprocket- 1.38” B.
3	C306615	Long Intake Boot
4	C306611	Lower Flight - 70’ & 90’
5	C306055	Boot Clean Out Door
6	C306052	Outer Gearbox Mount
7	C306051	Inner Gearbox Mount
8	C305026	PTO Clasp
9	C302884	3/8” Key x 1 1/4” long
10	C302713	Bearing Plate
11	C301853	Upper Bearing Shield
12	B199007	540 Cover Plate
13	B198362	Boot Access Cover
14	B029775	‘www.BRANDT.ca’ Decal
15	B029950	8 hr Grease Decal
16	B029410	Swing Auger Decal
17	B029350	Hydraulic Oil Decal
18	B029340	Remove PTO Decal
19	B029330	Needle Valve Decal
20	B029310	Cleanout Covers Decal
21	B029111	Moving Part Hazard Decal
22	B029100	Combo. Danger Decal
23	B029074	13” Shear Bolt Decal
24	B029061	Hitch/PTO Decal
25	B027504	Plastic Boot Shield
26	B021996	3” Rubber T Handle
27	B021889	Serial No. Plate
28	B0210275	Amber Reflect. Tape
29	B017203	1 3/8” Bearing - 2 Bolt
30	B017178	1 3/4” Bearing - 4 Bolt
31	B0094205	80-17 Sprocket- 1.75” B.
32	B0090255	R80x36 Chain c/w Conn.
33	B0030236	13” Lower Gearbox
34	B002457	1/8” Backup Washer
35	B002094	1/8”x 1 9/16” Hair Pin

REF #	PART NO.	DESCRIPTION
36	B0020795	1/8”x .640” Pop Rivet
37	B0020419	3/8”x 1.25” Set Screw
38	B001409	1/2” Serr. Flange Nut
39	B001405	3/8” Serr. Flange Nut
40	B001167	1/2” Lock Washer
41	B001165	3/8” Lock Washer
42	B001149	3/8” Flat Washer
43	B0011415	5/8” Stover Lock Nut
44	B001135	1/2” Hex Nut
45	B001134	1/2” Stover Lock Nut
46	B0011327	3/8” Wing Nut
47	B001130	3/8” Jam Nut
48	B0011275	5/16” Stover Lock Nut
49	B0010939	5/8”x 2” Carriage Bolt
50	B0010938	5/8”x 1 3/4” Carriage Bolt
51	B001082	3/8”x 1” Carriage Bolt
52	B0011105	3/4”x 5 1/2” Bolt
53	B001039	1/2”x 1” Bolt
54	B0010095	5/16”x 3/4” Screw
55	B001040	1/2”x 1 1/4” Bolt
56	B001019	5/16”x 4” Bolt Gr. 5
57	B001010	5/16”x 1” Bolt Gr. 5
58	B0010101	5/16”x 1” Bolt Gr. 8
59	B021994	1/8”x 3/4” Foam
60	B001088	1/2”x 1 1/2” Carriage Bolt
61	B001453	1/2”x 1” Serr. Flange Bolt
62	C306053	13” Hitch
63	B001143	3/4” Lock Nut
64	B030500	2000 lb Side Wind Jack
65	B194181	Boot/Winch Mount Plate
66	B194182	Winch Mount Plate
67	B394682	Winch Mount Pin
68	B030200	S-1500 Brake Winch
69	B002091	3/16”x 3 3/4” Hair Pin
70	B0011326	3/8” Locking Flange Nut
71	B001025	3/8”x 1 1/4” Bolt

SWING HOPPER ASSEMBLY - 13” MDSA AUGER
SERIAL NOS. 84000 - 87999

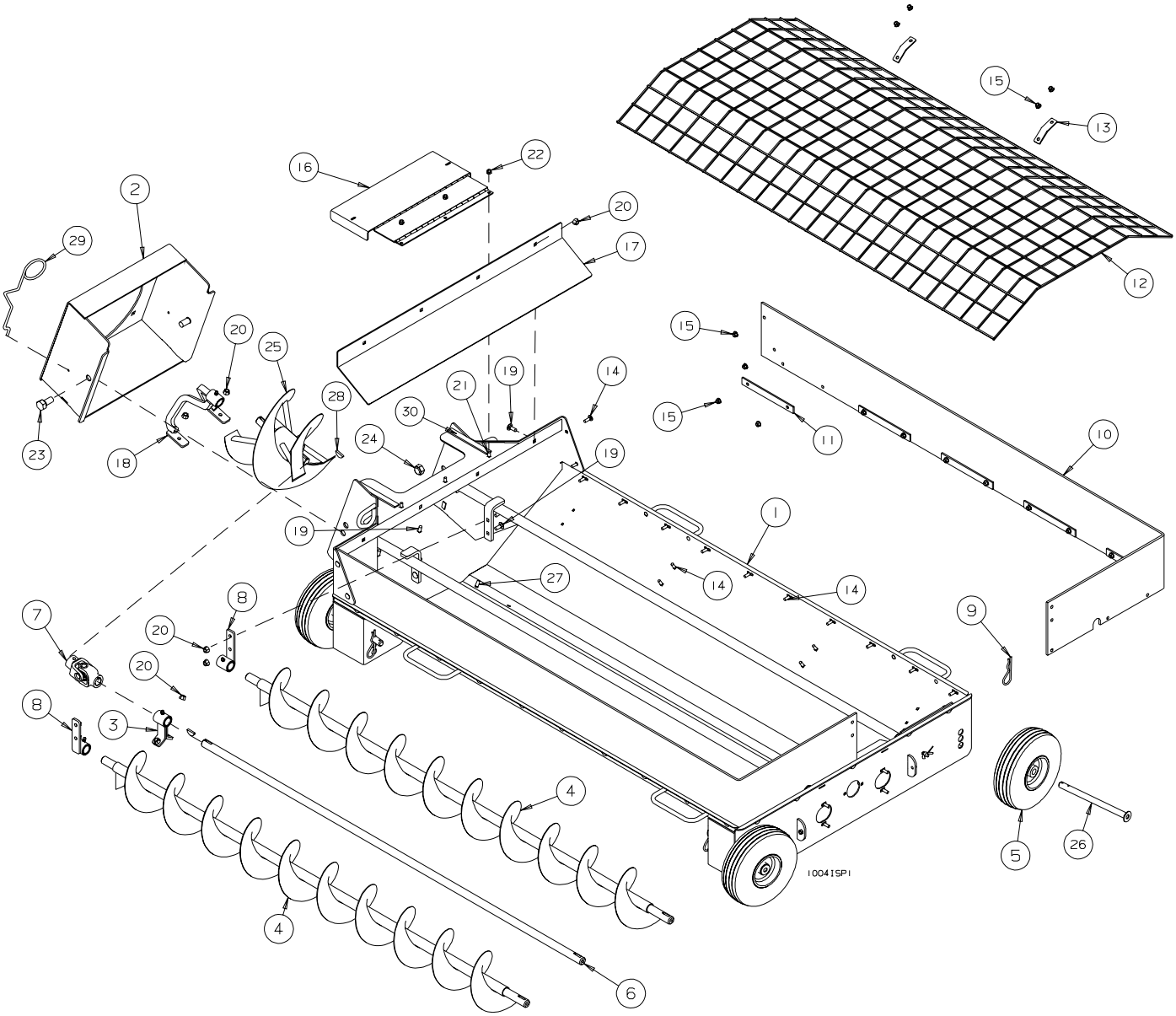

REF #	PART NO.	DESCRIPTION
1	C104001	Swing Hopper Weldment
2	C304000	13” Hopper Transition
3	C104004	Hopper Driveshaft Bearing
4	C104009	Hopper Flight
5	B011045	10” Dia Hopper Tire & Rim - Extended Hub
6	C304005	13” Hopper Driveshaft
7	B0321125	1” x 1” U-Joint - 6R
8	C104005	Flight Hanger
9	B002091	.177” x 3 3/4” Hair Pin Clip
10	B0210415	Rubber Hopper Extension
11	B198071	Aluminum Hold Down Strap
12	C104010	Hopper Safety Grate
13	B198358	Hopper Mesh Retainer
14	B0010811	5/16” x 1” Carriage Bolt
15	B0011276	5/16” Flange Lock Nut
16	C104013	Transition Cover
17	C104012	Baffle Plate
18	C304004	13” Transition Flight Mount
19	B001082	3/8” x 1” Carriager Bolt
20	B001405	3/8” Serrated Flange Nut
21	B001081	5/16” x 3/4” Carriage Bolt
22	B001127	5/16” Lock Nut
23	B001099	3/4” x 1 1/2” Bolt
24	B001143	3/4” Lock Nut
25	C304006	13” Transition Flight
26	B198856	Hopper Wheel Pin
27	B001433	3/8” x 1” Serrated Flange Bolt
28	B009700	1.25” x .25” Woodruff Key - #810
29	B021086	Cover Hold Down Spring
30	C104022	Hopper Foam Seal

SWING HOPPER DRIVE ASSEMBLY - 13” MDSA AUGER
SERIAL NOS. 84000 - 87999

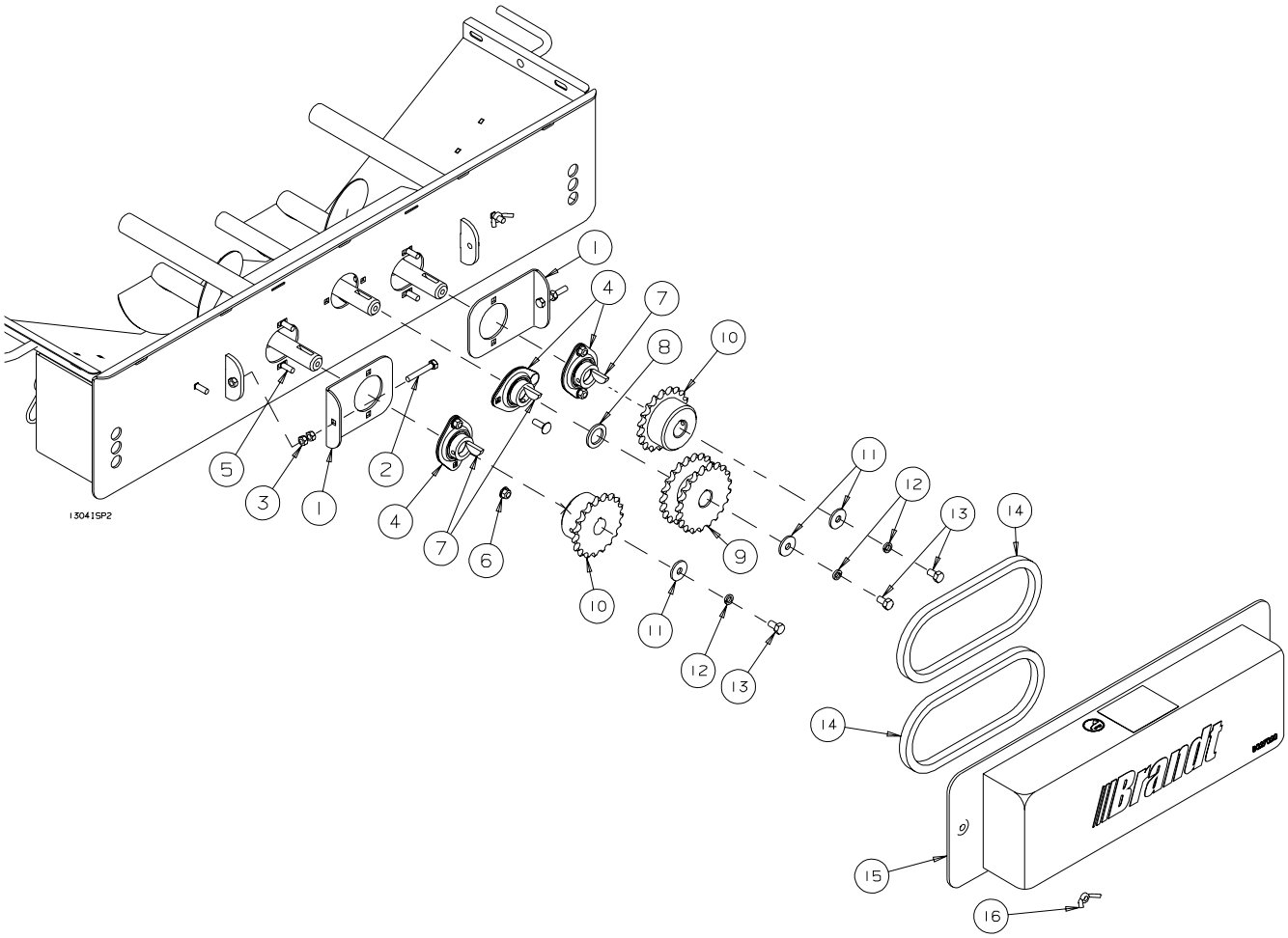

REF #	PART NO.	DESCRIPTION
1	C104017	Chain Tension Plate
2	B0010213	5/16” x 2” Full Thread Bolt
3	B001126	5/16” Nut
4	B017111	1” - 2 Bolt Flangette Bearing
5	B0010811	5/16” x 1” Carriage Bolt
6	B0011276	5/16” Locking Flange Nut
7	B009700	1.25” x .25” Woodruff Key - #810
8	B002073	1 1/2” OD x 1” ID x 10 Ga Machinery Bushing
9	B0090021	50-21 Double Sprocket - 1” Bore
10	B0094126	50-19 Sprocket - 1” Bore - Extended Hub
11	B0020718	1 1/4” OD x 3/8” ID Washer
12	B001165	3/8” Lockwasher
13	B0010225	3/8” x 5/8” Bolt
14	B0090051	R50 x 37 Pitch Roller Chain c/w Offset & Connector Link
15	C104021	Hopper Chain Guard
16	B001129	5/16” Wing Nut

SWING TUBE ASSEMBLY - 13” MDSA AUGER
SERIAL NOS. 84000 - 87999

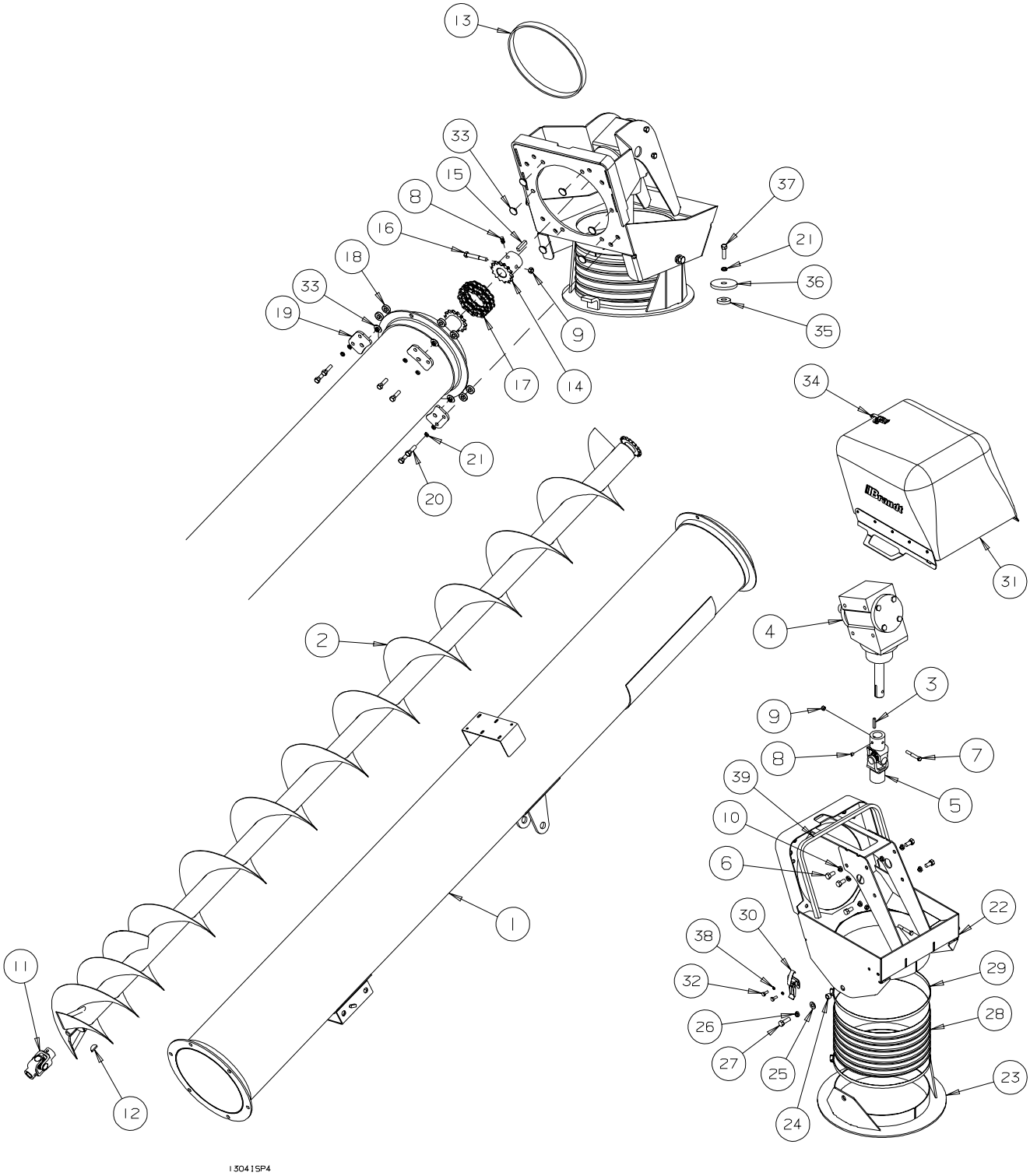

REF #	PART NO.	DESCRIPTION
1	C308001	Swing Tube
2	C304002	Swing Tube Flight
3	B194012	5/16'' x 1 1/2'' Key
4	B003024	Gearbox 1:1 - Upper
5	B032137	U-Joint - 1 3/8” x 21 Spline
6	B001039	1/2'' x 1'' Bolt
7	B001032	3/8'' x 2 1/2'' Hex Bolt - GR 5
8	B002041	3/8” x 3/8” Set Screw
9	B0011325	3/8'' Lock Nut
10	B001167	1/2'' Lock Washer
11	B0321125	1” x 1” U-Joint - 6R
12	B009700	1.25” x .25” Woodruff Key - #810
13	C303972	Spout Tube Seal
14	B0090026	#50 - 18 Sprocket - 1 3/8” Bore
15	B496680	5/16” X 1 1/2” Key
16	B001037	3/8” x 3” Bolt - Gr.8
17	B009593	50-2 Chain - 18 Pitch
18	B027499	Plastic Spacer Bushing
19	C100870	Retainer Plate
20	B001025	3/8” x 1 1/4” Bolt
21	B001165	3/8” Lockwasher
22	C306776	Upper Spout Swivel
23	C306777	Lower Spout Swivel
24	C100869	Swivel Bushing
25	B001152	1/2” SAE Flatwasher
26	B001167	1/2” Lock washer
27	B001041	1/2” x 1 1/2” Bolt
28	C300785	14” Downspout Hose x 12”
29	B024214	14” Hose Clamp
30	B021100	Large Latch Assembly
31	C306811	Plastic Spout Cover Assembly
32	B001002	1/4” x 3/4” Bolt
33	B027500	Plastic Wear Bushing
34	B021110	Small Latch Assembly
35	C100889	Small Swing Tube Spacer
36	B198361	Large Swing Tube Retainer
37	B001031	3/8”x 1 1/2” Bolt
38	B001163	1/4” Lock Washer
39	13718	Spout Cover Seal

FLIGHT REVERSER ASSEMBLY - 13” MDSA AUGER
SERIAL NOS. 84000 - 87999

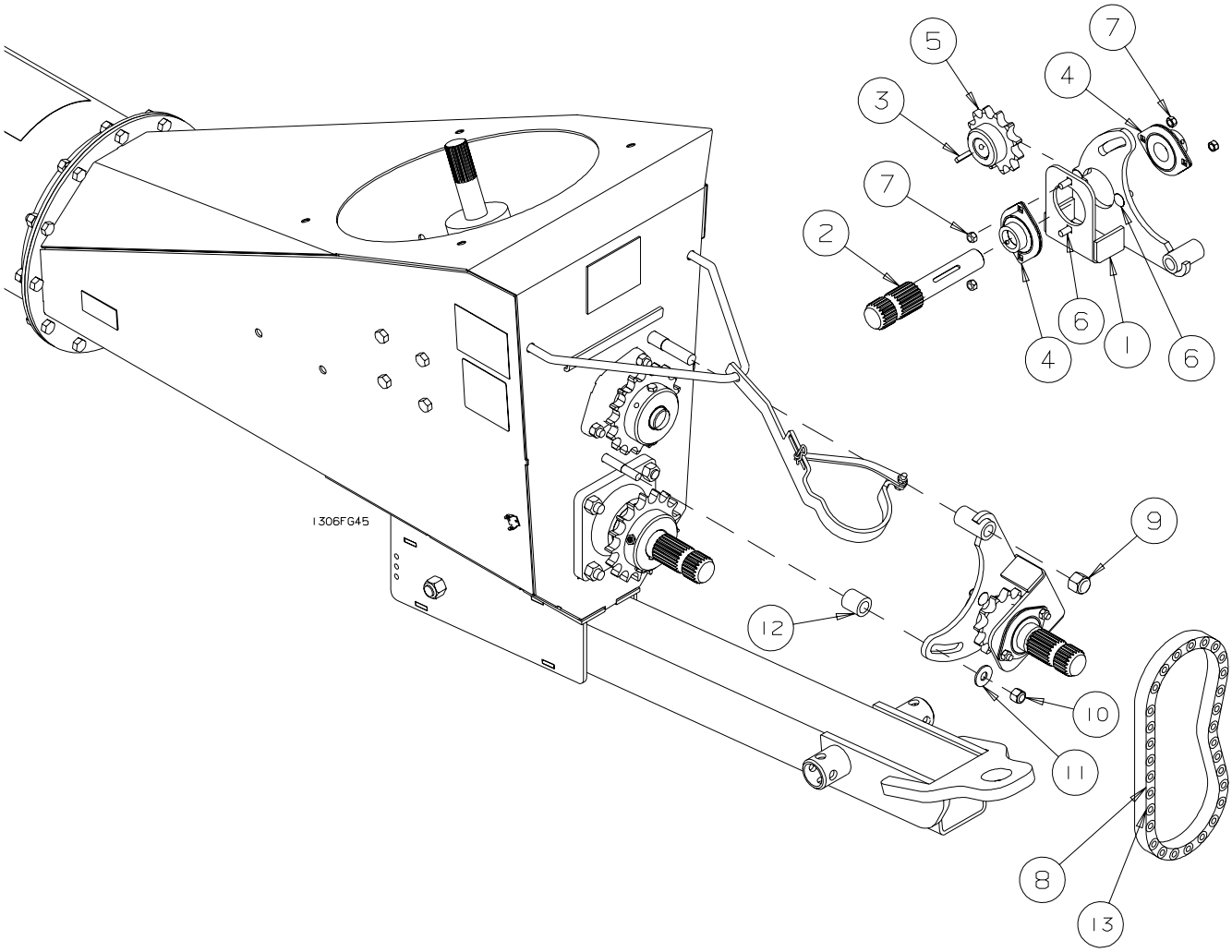

REF #	PART NO.	DESCRIPTION
1	C302718	Reverser - Main Bracket
2	B032210	20 Splined Shaft - 9"
3	B185206	1/4" x 1 1/8" Key
4	B017120	Bearing c/w 1 1/4" - 2 Bolt Flangette
5	B009160	Sprocket, 80-12 - 1 1/4" Bore
6	B001082	3/8" x 1" Carriage Bolt
7	B0011325	3/8" Stover Locknut
8	B009025	R80 Chain x 35 Pitch
9	B001143	3/4" Lock Nut
10	B001136	1/2" Lock Nut
11	B001151	1/2" Flat Washer
12	C306719	1 1/2" Thick Spacer
13	B009051	R80 Chain Offset Link

WEASLER SERIES 35E - 50 CV - 20 SPLINE B0030521
13”x 70’ MDSA AUGERS SERIAL NO. 84000 - 87999

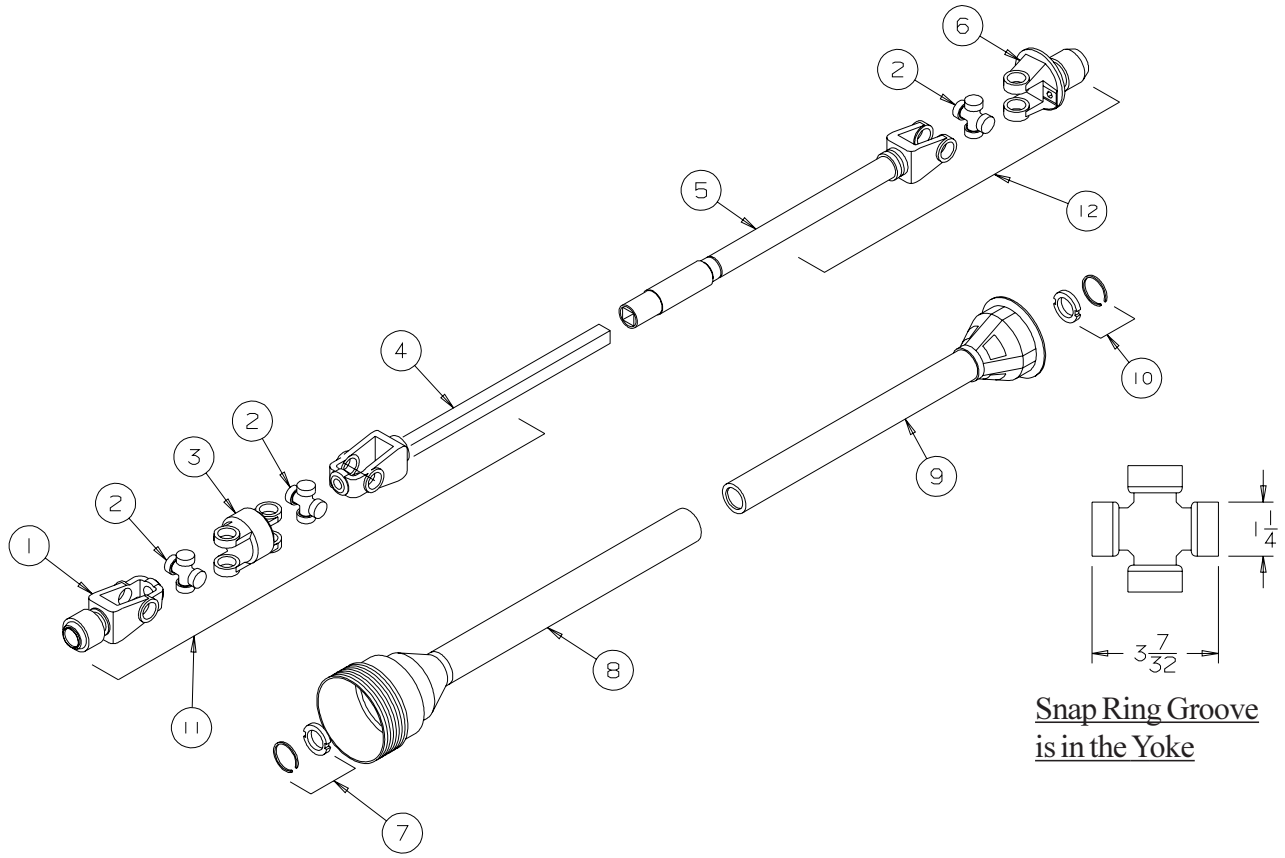

REF #	PART NO.	DESCRIPTION	QTY.
1	B003748	Implement Yoke - 20 Spline	1
2	B003715	Cross & Bearing Kit	3
3	B003741	Centre Housing	1
4	B003742	Output Yoke & Shaft - CV End	1
5	B003743	Input Yoke & Tube - Implement End	1
6	B003744	Shear Yoke Assembly - 6 Spline	2
7	B003738	Shield Bearing - CV End	1
8	B003746	Outer Shield	1
9	B003747	Inner Shield	1
10	B003745	Shield Bearing - Tractor End	1
11	B0030521A	Implement Half of Shaft c/w Guard - 20 Spline	1
12	B003052T	Tractor Half of Shaft c/w Guard - 6 Spline	1
NS	B0010101	Shear Bolt - 5/16” x 1” Gr.8	2
NS	B003103	Shear Nut - 5/16” Stover Lock Nut	2

WEASLER SERIES 55E - 50 CV - 20 SPLINE B0030541
13”x 90’ MDSA AUGERS SERIAL NO. 84000 - 87999

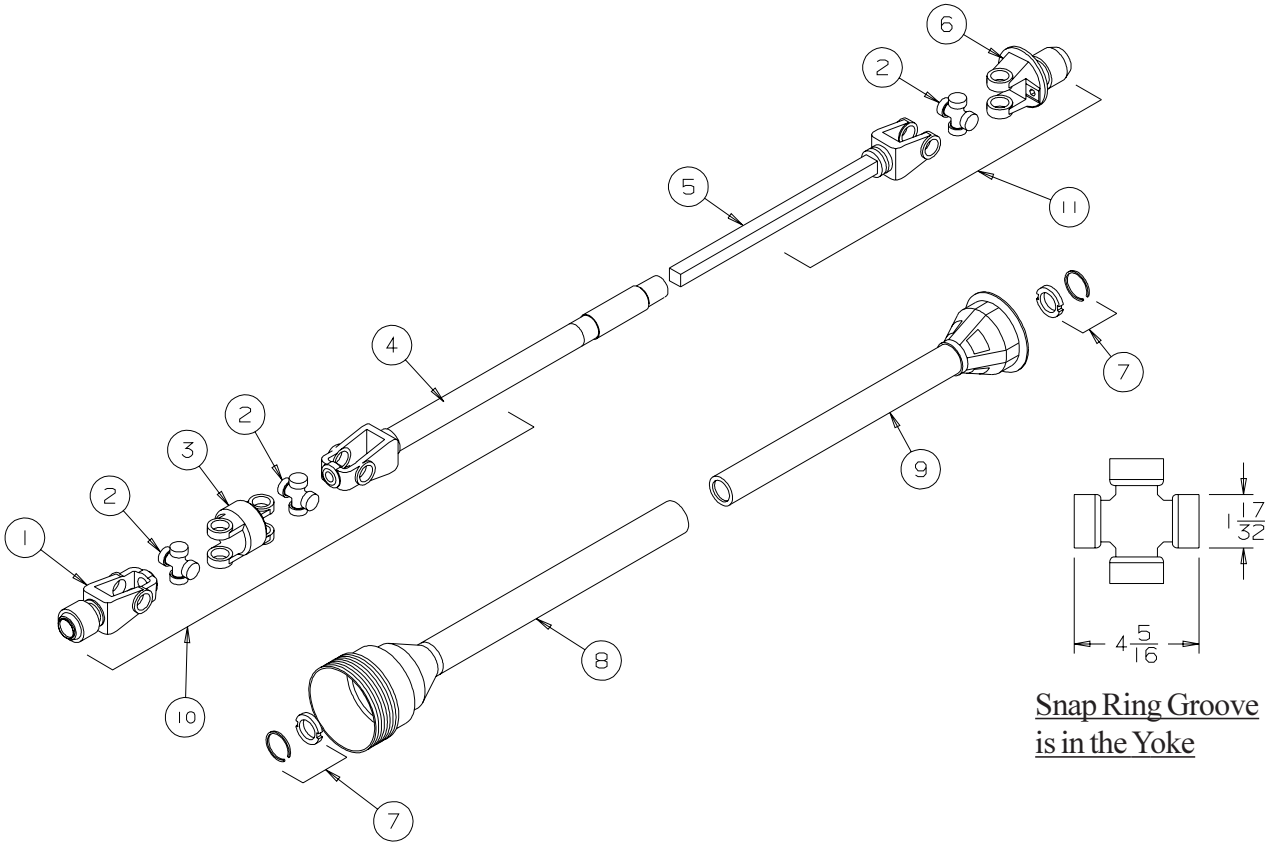

REF #	PART NO.	DESCRIPTION	QTY.
1	B0038201	Implement Yoke - 20 Spline	1
2	B003717	Cross & Bearing Kit	3
3	B003821	Centre Housing	1
4	B003822	Output Yoke & Shaft - CV End	1
5	B003823	Input Yoke & Tube - Implement End	1
6	B003824	Shear Yoke Assembly - 6 Spline	2
7	B003825	Shield Bearing - CV End	1
8	B003826	Outer Shield	1
9	B003827	Inner Shield	1
10	B0038281	Implement Half of Shaft c/w Guard - 20 Spline	1
11	B003829	Tractor Half of Shaft c/w Guard - 6 Spline	1
NS	B0010101	Shear Bolt - 5/16” x 1” Gr.8	2
NS	B003103	Shear Nut - 5/16” Stover Lock Nut	2

UPPER GEARBOX - B003024

13” MDSA AUGERS SERIAL NO. 84000 - 87999

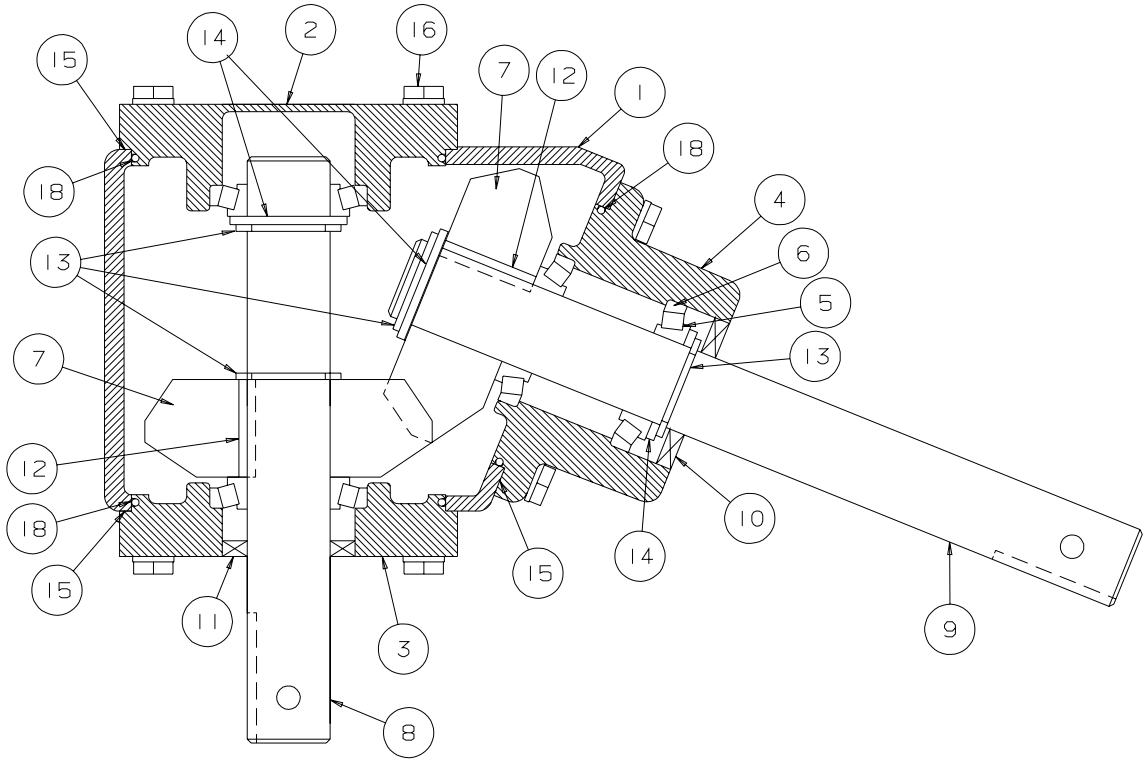

REF #	PART #	DESCRIPTION
1	B003023501	Case
2	B003023502	End Cap - no hole
3	B003023503	End Cap c/w hole
4	B003024504	Quill Housing
5	B003023505	Bearing Cone LM48548
6	B003023506	Bearing Cup LM48510
7	B003023507	Gear - 17 tooth
8	B003024508	Output Shaft
9	B00302409	Input Shaft
10	B003023510	Shaft Seal
11	B003023511	Shaft Seal
12	B003023512	Key - 5/16” x 1.61”
13	B003023513	Snap Ring
14	B003023514	Spacer
15	B003023515	Gasket
16	B003023516	Cap Screw - 3/8”x 1”
17	B003023517	9/16” Pipe Plug c/w O-Ring (not shown)
18	B003023518	O-Ring

LOWER GEARBOX - B0030236

13” MDSA AUGERS SERIAL NO. 84000 - 87999

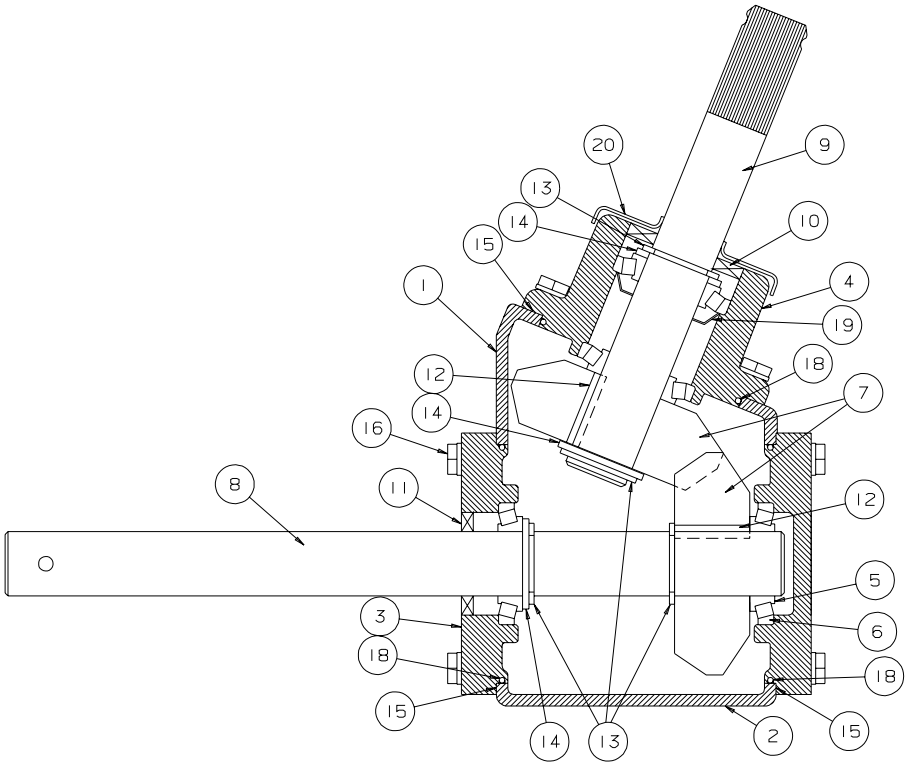

REF #	PART #	DESCRIPTION
1	B003023501	Case
2	B003023502	End Cap - no hole
3	B003023503	End Cap c/w hole
4	B003023504	Quill Housing
5	B003023505	Bearing Cone LM48548
6	B003023506	Bearing Cup LM48510
7	B003023507	Gear - 17 tooth
8	B003023608	Input Shaft
9	B003023609	Output Shaft - Splined
10	B003023510	Shaft Seal
11	B003023511	Shaft Seal
12	B003023512	Key - 5/16” x 1.61”
13	B003023513	Snap Ring
14	B003023514	Spacer
15	B003023515	Gasket
16	B003023516	Cap Screw - 3/8”x 1”
17	B003023517	9/16” Pipe Plug c/w O-Ring (not shown)
18	B003023518	O-Ring
19	B003023519	Grease Washer
20	B003023520	Debris Shield

HYDRAULIC SWING HOPPER WINCH ASSEMBLY - 13” MDSA AUGER
SERIAL NOS. 84000 - 87999

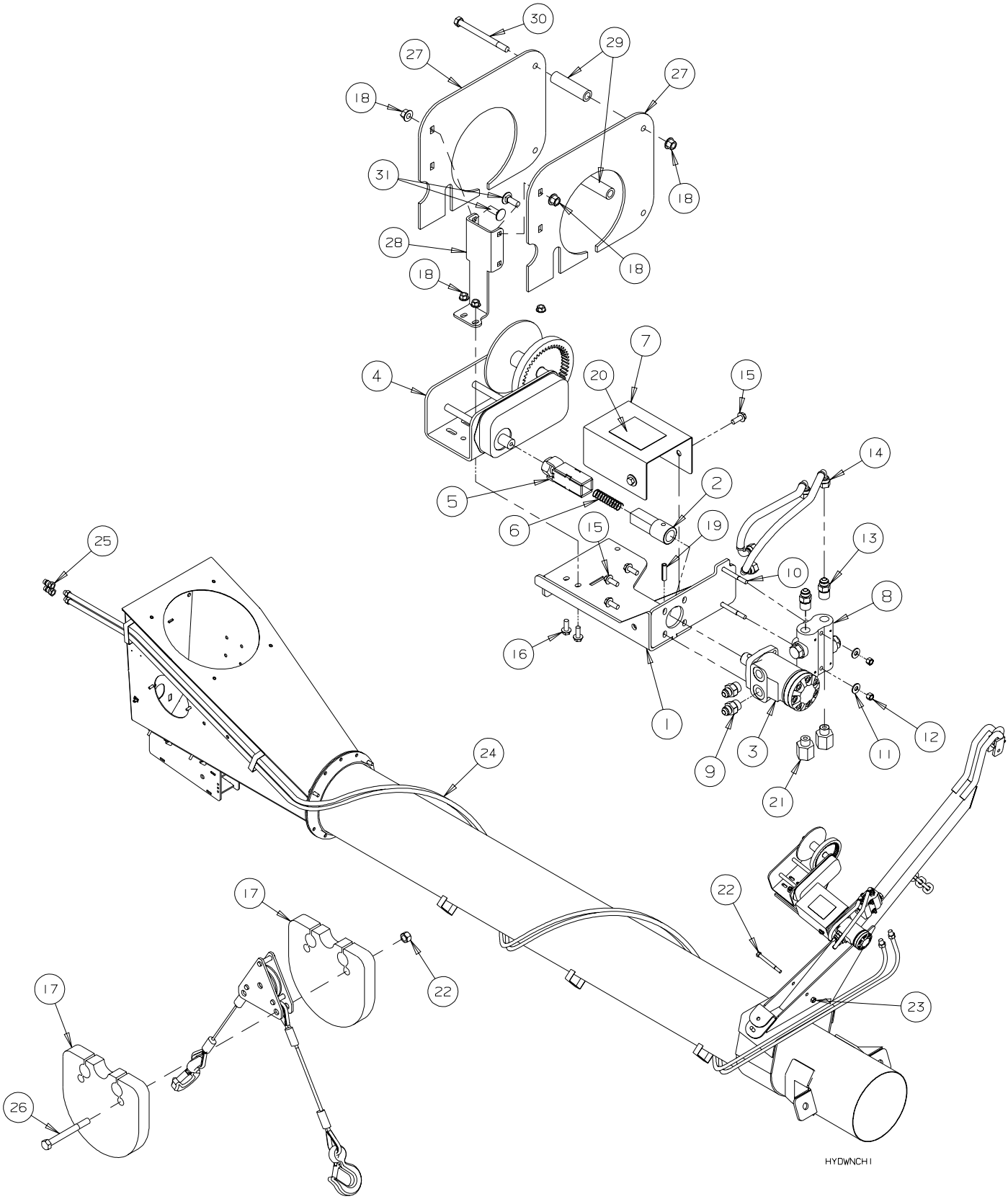

REF #	PART NO.	DESCRIPTION
1	C303914	Winch Mount
2	C303912	Hydraulic Motor Coupling
3	B019043	Hydraulic Motor - 5.9 cu in/rev
4	B030400	Dutton Lainson 2500 lbs Winch
5	C303970	Winch Coupler
6	B0210732	Compression Spring - 11/16” x 3” x 0.047” wire
7	C303971	Hydraulic Winch Guard
8	B0197495	Cushion Valve - #8 ORB ports
9	B019434	#10 MORB x #8 MJIC Adapter
10	B001017	5/16” x 3” Bolt
11	B001148	5/16” Flatwasher
12	B0011275	5/16” Lock Nut
13	B019440	#8 MORB x #8 MJIC Adapter
14	B019064	3/8” Hydra. Hose x 18” - #8 FJIC Elbow both ends
15	B001432	3/8” x 3/4” Serrated Flange Bolt
16	B001434	3/8” x 1 1/4” Serrated Flange Bolt
17	C308890	Weight Plate
18	B001405	3/8” Serrated Flange Nut
19	B0020612	3/8” x 1 1/2” Roll Pin
20	B029111	Moving Parts Hazard Decal
21	B019445	#8 MORB x 1/2” FPT Adapter
22	B001059	1/2” x 5” Bolt
23	B001134	1/2” Lock Nut
24	B019071	3/8” Hydra. Hose x 25’ - 1/2” MPT Elbow both ends
25	B019200	Pioneer Tip - 1/2” FPT
26	B001057	1/2”x 4 1/2” Bolt
27	C308135	Winch Side Plate
28	C308136	Winch Support Plate
29	C308137	Winch Spacer Plate
30	B001035	3/8”x 4” Bolt
31	B001083	3/8”x 1” Carriage Bolt

SIDE DRIVE KIT - 13” MDSA AUGER
SERIAL NOS. 84000 - 87999

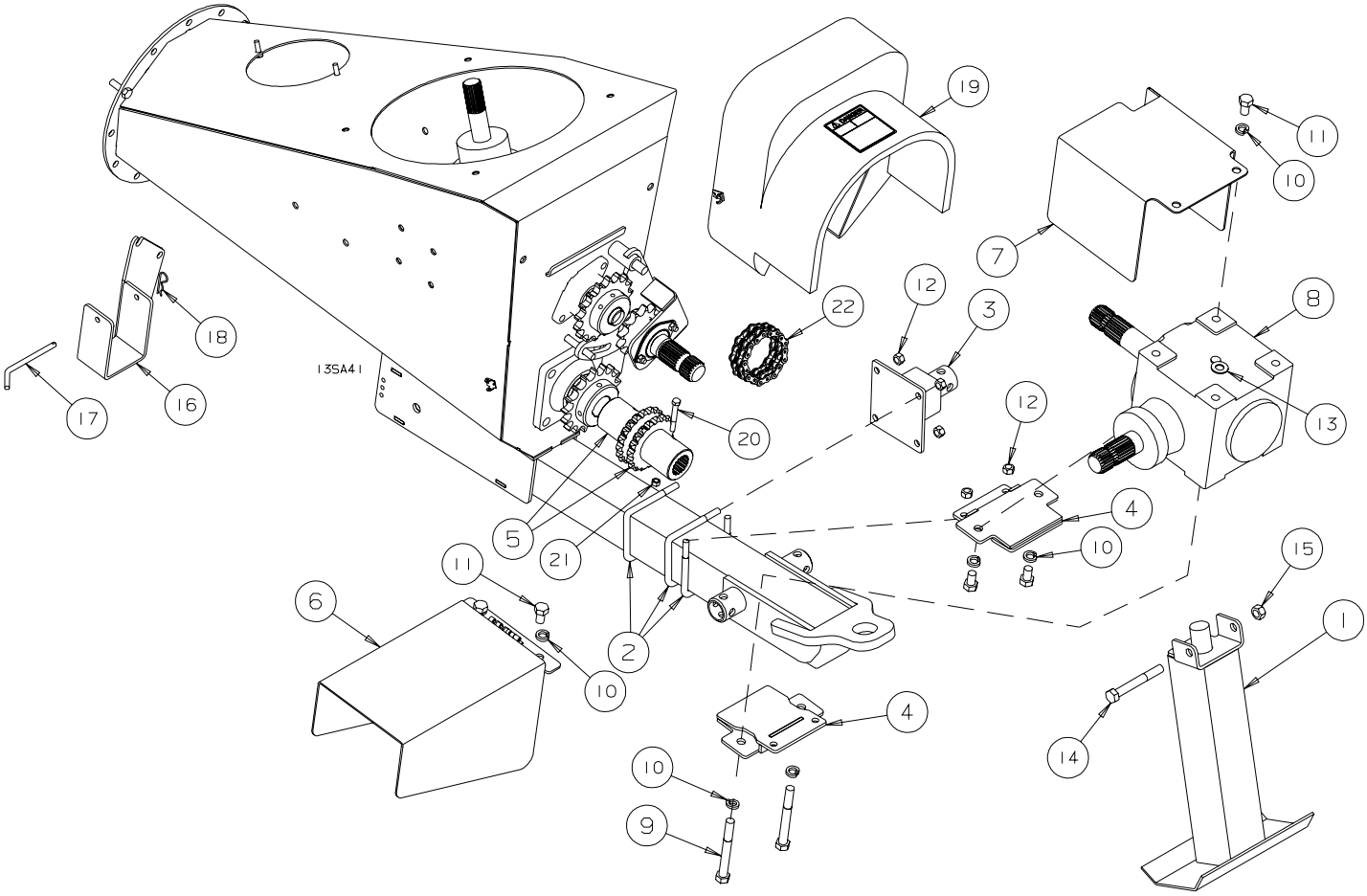

REF #	PART NO.	DESCRIPTION
1	C306935	Stand-Side Drive
2	B0020177	1/2” x 4 1/16” x 5” Deep U-Bolt
3	C306066	Jack Mount
4	C306065	Gearbox Mount
5	C302916	Coupling - 80-17 Sprocket - 1 3/4” Spline
6	C302909	PTO Guard
7	C302908	Coupler Guard
8	B003025	Gearbox - Side Drive PTO
9	B0010745	5/8” x 5 1/2” UNC Bolt - GR 5
10	B001169	5/8” Lockwasher
11	B0010679	5/8” x 1” UNC Bolt - GR 5
12	B001134	1/2” Stover Lock Nut
13	B0011535	5/8” SAE Flatwasher
14	B0010744	5/8” x 5” UNC Bolt - GR 5
15	B001139	5/8” Hex Nut
16	C302906	PTO Holder
17	B496655	PTO Pin
18	B002092	.094” x 2 1/4” Hair Pin Clip
19	C306934	Plastic Boot Guard - Side Drive
20	B0010385	3/8” x 2 3/4” UNC Bolt - GR. 8
21	B0011325	3/8” Stover Lock Nut
22	B009331	80-2 x 17 Pitch Roller Chain c/w Offset & Connector Links
NS	B003057	1390 Side Drive PTO Shaft
NS	B003056	1370 Side Drive PTO Shaft

WEASLER SERIES 35E
B003056 - 1370 MDSA AUGER - SIDE DRIVE

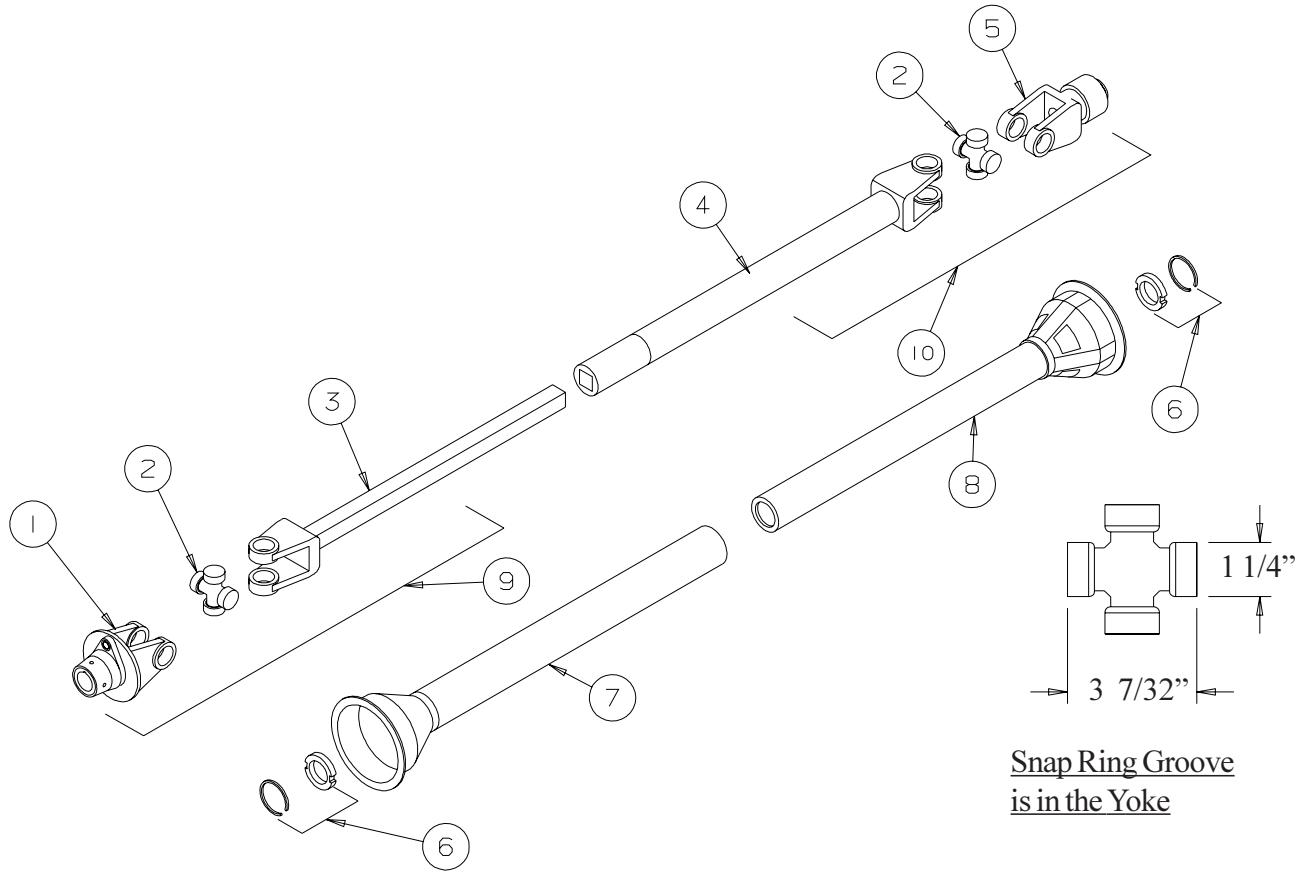

REF #	PART NO.	DESCRIPTION	QTY.
1	B003795	Shear Yoke - 6 Spline	1
2	B0037151	Cross & Bearing Kit	2
3	B0030563	Yoke & Shaft Ass’y	1
4	B0030564	Yoke & Tube Ass’y	1
5	B0038071	Yoke Assembly - 20 Spline	1
6	B003776	Shield Bearing	2
7	B0030565	Outer Shield	1
8	B0030566	Inner Shield	1
9	B0030561	Tractor Half of Shaft c/w Guard - 6 Spline	1
10	B0030562	Implement Half of Shaft c/w Guard - 20 Spline	1
NS	B001010	Shear Bolt - 5/16” x 1” Bolt Gr. 5	2
NS	B0011275	Shear Nut - 5/16” Stover Lock Nut	2

B003057 - 1390 MDSA AUGER - SIDE DRIVE

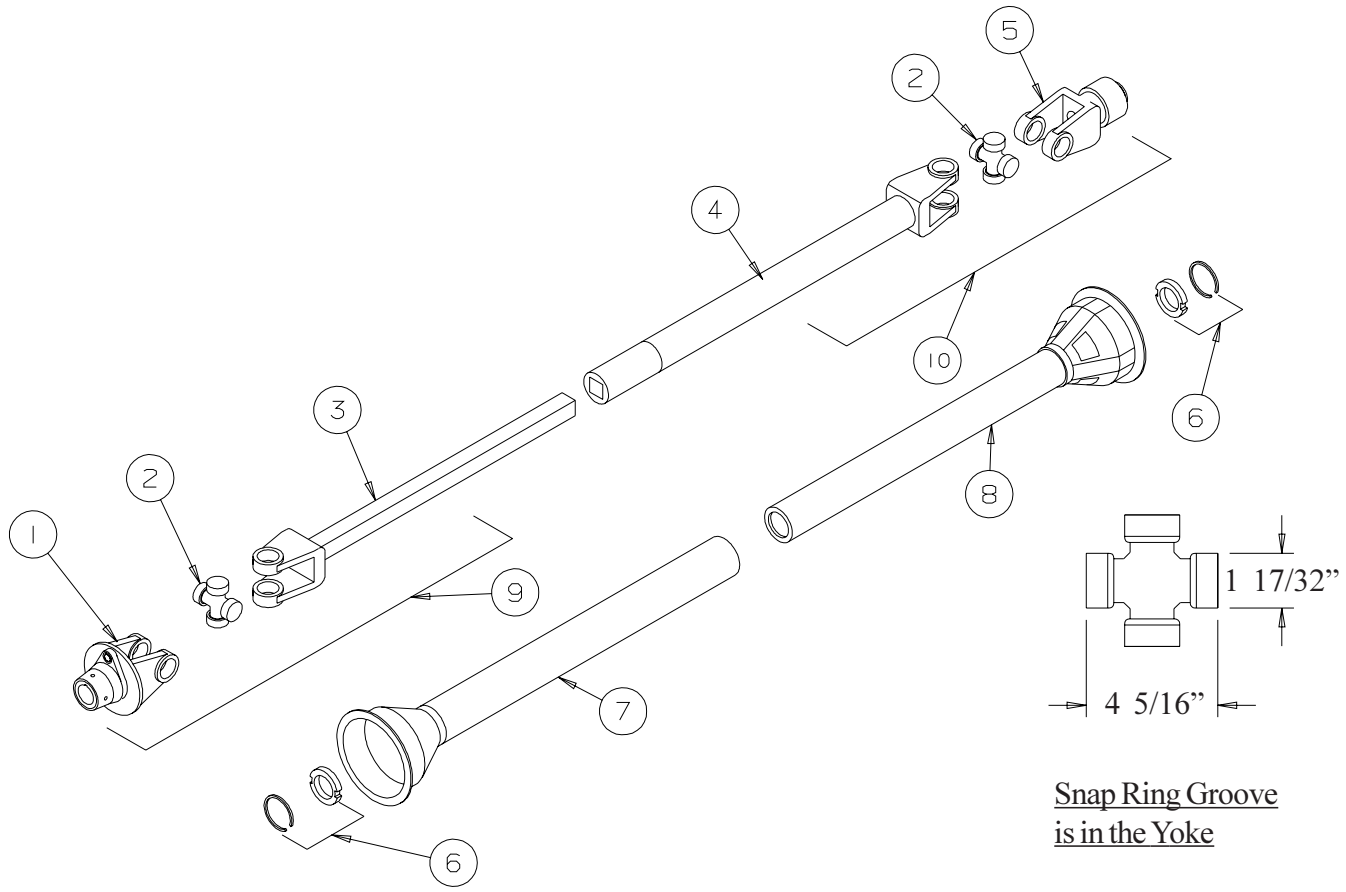

REF #	PART NO.	DESCRIPTION	QTY.
1	B003824	Shear Yoke - 6 Spline	1
2	B0037171	Cross & Bearing Kit	2
3	B0030573	Yoke & Shaft Ass’y	1
4	B0030574	Yoke & Tube Ass’y	1
5	B0038577	Yoke Assembly - 20 Spline	1
6	B003825	Shield Bearing	2
7	B0030575	Outer Shield	1
8	B0030576	Inner Shield	1
9	B0030571	Tractor Half of Shaft c/w Guard - 6 Spline	1
10	B0030572	Implement Half of Shaft c/w Guard - 20 Spline	1
NS	B0010101	Shear Bolt - 5/16” x 1” Bolt Gr. 8	2
NS	B0011275	Shear Nut - 5/16” Stover Lock Nut	2